# Synchronous Buck-Boost DC/DC Constant Output Current Regulator

## Features

- Synchronous Rectification: Up to 95% Efficiency
- Single Inductor
- Quiescent Current：3mA (50uA low power mode: mode pin high)
- Up to 700mA Continuous Output Current
- 2.2V to 5V Input and Output Voltage Range
- No Schottky Diodes Required
- Shutdown current: $I_Q$＜1μA
- Package: Small Thermally Enhanced DFN3*3-10L or MSOP-10L

## Applications

- Driver LED:1W/3W
- Digital cameras and Wireless handsets
- Palmtop computers
- Handheld instruments
- MP3/MP4 players

## Description

The HM3441 is high efficiency, fixed frequency, Buck-Boost DC/DC constant output current converter which operates from input voltages above, below or equal to the output voltage. The devices are suitable for single lithium-ion, multicell alkaline or NiMH applications where the output voltage is within the battery voltage range.

Other features include a below 1μA shutdown current, thermal shutdown and current limit. The HM3441 converter is available in the 10-pin thermally enhanced DFN3*3-10L or MSOP-10L packages.

## Typical Application Circuit

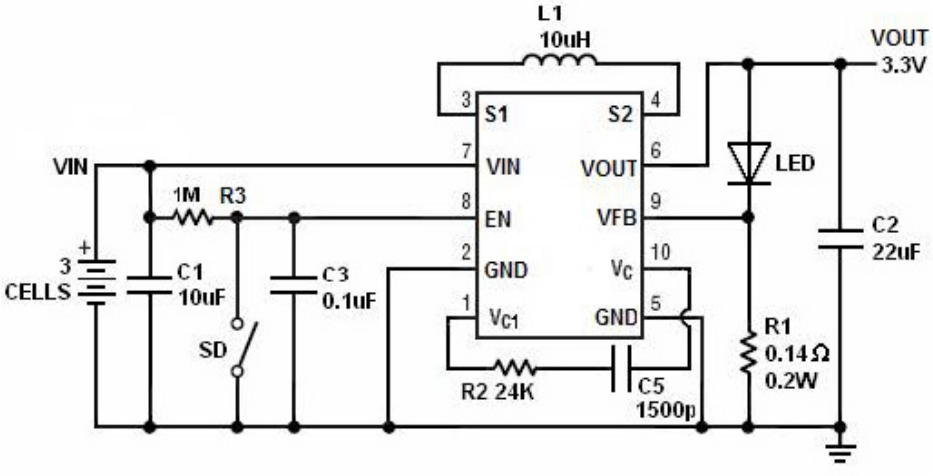


＊ The LED current $I_{LED}$ =VFB/R1 (VFB is usually 100mV).

## Pin Assignment

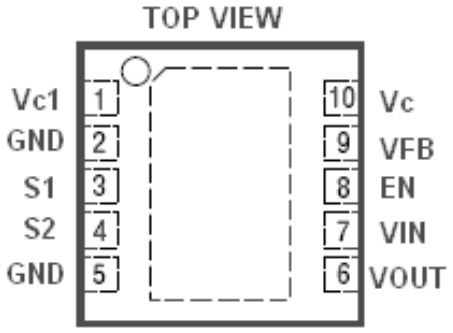


**DFN3*3-10L**

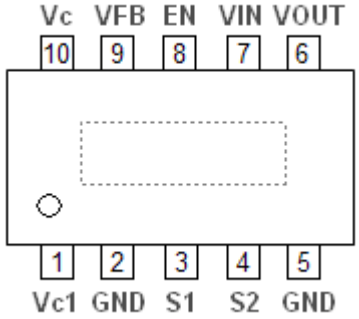


**MSOP-10L**

| PIN NUMBER DFN3*3-10L or MSOP-10L | PIN NAME | FUNCTION |
|---|---|---|
| 1 | $V_{C1}$ | Frequency compensation |
| 2 | GND | Ground |
| 3 | S1 | Switch 1 |
| 4 | S2 | Switch 2 |
| 5 | GND | Ground |
| 6 | VOUT | Output |
| 7 | VIN | Input |
| 8 | EN | ON/OFF Control (High Enable) |
| 9 | VFB | Feedback |
| 10 | $V_C$ | Frequency compensation |

## Absolute Maximum Ratings

- $V_{IN}$ ……..- 0.3 V ～ + 6 V
- $V_C$,FB,EN……- 0.3 V ～+ 6 V
- $V_{SW}$ ……- 0.3 V ～ + 6 V
- $V_{OUT}$……- 0.3 V ～ + 6 V
- Operating Temperature Range ……- 40℃ ～ + 85℃
- Lead Temperature (Soldering 10 sec……+ 300℃
- Storage Temperature Range ……- 65℃ ～ + 150℃

## Electrical Characteristics

Operating Conditions: TA=25℃, $V_{IN}$= $V_{OUT}$ =3.6V unless otherwise specified.

| PARAMETER | CONDITIONS | MIN | TYP | MAX | UNITS |
|---|---|---|---|---|---|
| Input Start-Up Voltage | | | 2.2 | | V |
| Input Operating Range | | 2.2 | | 5 | V |
| Output Voltage Adjust Range | | 2.2 | | 5 | V |
| Feedback Voltage | | 0.098 | 0.100 | 0.108 | V |
| Feedback Input Current | $V_{FB}$=0.1V | | 1 | 50 | nA |
| Quiescent Current, Shutdown | EN=0V, Not Including Switch Leakage | | 0.1 | 1 | μA |
| Quiescent Current | | | 3 | | mA |
| NMOS Switch Leakage | Switches B and C | | 0.1 | 5 | μA |
| PMOS Switch Leakage | Switches A and D | | | 10 | μA |
| NMOS Switch On Resistance | Switches B and C | | 0.19 | | Ω |
| PMOS Switch On Resistance | Switches A and D | | 0.22 | | Ω |
| Input Current Limit | | 1 | | | A |
| Maximum Duty Cycle | Boost (% Switch C On) | 55 | 75 | | % |
| | Buck (% Switch A On) | 100 | | | % |
| Minimum Duty Cycle | | | | 0 | % |
| Frequency Accuracy | | | 1.15 | | MHz |
| EN Input High | | 1.5 | | | V |
| EN Input Low | | | | 0.4 | |
| EN Input Current | $V_{EN}$=4.6V | | 0.01 | 1 | μA |

## Pin Description

**$V_{C1}$ (Pin 1):** Frequency compensation pin

**GND (Pin 2):** Signal and Power Ground for the IC.

**S1 (Pin 3):** Switch Pin Where the Internal Switches A and B are Connected. Connect inductor from SW1 to SW2. An optional Schottky diode can be connected from SW1 to ground. Minimize trace length to keep EMI down.

**S2 (Pin 4):** Switch Pin Where the Internal Switches C and D are connected. For applications with output voltages over 4.3V, a Schottky diode is required from SW2 to $V_{OUT}$ to ensure the SW pin does not exhibit excess voltage.

**GND (Pin 5):** Signal and Power Ground for the IC.

**VOUT (Pin 6):** Output of the Synchronous Rectifier. A filter capacitor is placed from VOUT to GND.

**VIN (Pin 7):** Input Supply Pin, Internal $V_{CC}$ for the IC. A ceramic bypass capacitor as close to the VIN pin and GND (Pin 5) is required.

**EN (Pin 8):** Combined Soft-Start and Shutdown. Grounding this pin shuts down the IC. Tie to >1.5V to enable the IC and > 1.8V to ensure the error amp is not clamped from soft-start. An RC from the shutdown command signal to this pin will provide a soft-start function by limiting the rise time of the $V_C$ pin.

**VFB (Pin 9):** Feedback Pin. Connect resistor divider tap here. The output voltage can be adjusted from 1.8V to 4.6V. The feedback reference voltage is typically 0.1V.

**$V_C$ (Pin 10):** Frequency compensation pin.

## Applications Information

The HM3441 employs a buck-boost DC/DC converter to generate the output voltage required to drive a high current LED. This architecture permits high efficiency, low noise operation at input voltages above, below or equal to the output voltage by properly phasing four internal power switches. The error amp output voltage on the $V_C$ pin determines the duty cycle of the switches.

Since the $V_C$ pin is a filtered signal, it provides rejection of frequencies well below the factory trimmed switching frequency of 1.1MHz. The low $R_{DS}$ (ON), low gate charge synchronous switches provide high frequency pulse width modulation control at high efficiency.

**Undervoltage Lockout**

To prevent operation of the power switches at high $R_{DS}$(ON), an undervoltage lockout is incorporated on the HM3441. When the input supply voltage drops below approximately 1.9V, power switches and all control circuitry are turned off except for the undervoltage block, which draws a few microamperes.

**Overtemperature Protection**

If the junction temperature of the HM3441 exceeds 130℃ for any reason, all four switches are shut off immediately. The overtemperature protection circuit has a typical hysteresis of 11℃.

**LED Current Programming and Enable Circuit**

The enable pin work in conjunction with external resistor to program LED current to one of three nonzero settings.

With the enable pin pulled high, the buck-boost will regulate the output voltage at the current programmed by R1.

With both enable pins pulled to GND, the HM3441 is in shutdown and draws zero current. The enable pin is high impedance inputs and should not be floated.

Inductor Selection

The high frequency operation of the HM3441 allows the use of small surface mount inductors. The inductor current ripple is typically set to 20% to 40% of the maximum average inductor current. For a given ripple the inductance term in boost mode is:

$$L > \frac{V_{IN(MIN)}^2 \bullet \left(V_{OUT} - V_{IN(MIN)}\right) \bullet 100\%}{f \bullet I_{OUT(MAX)} \bullet \%Ripple \bullet V_{OUT}^2}$$

and in buck mode is:

$$L > \frac{\left(V_{IN(MAX)} - V_{OUT}\right) \bullet V_{OUT} \bullet 100\%}{f \bullet V_{IN(MAX)} \bullet \%Ripple \bullet I_{OUT}}$$

where f = operating frequency, Hz

%Ripple = allowable inductor current ripple, %

VIN (MIN) = minimum input voltage, V

VIN (MAX) = maximum input voltage, V

VOUT = output voltage, V

IOUT (MAX) = maximum output load current

For high efficiency, choose an inductor with a high frequency core material, such as ferrite, to reduce core loses.

The inductor should have low ESR (equivalent series resistance) to reduce the I2R losses, and must be able to handle the peak inductor current without saturating.

Molded chokes or chip inductors usually do not have enough core to support peak inductor currents >1A. To minimize radiated noise, use a toroid, pot core or shielded bobbin inductor.

**Input Capacitor Selection**

Since the VIN pin is the supply voltage for the IC it is recommended to place at least a 2.2μF, low ESR bypass capacitor to ground.

**Output Capacitor Selection**

The bulk value of the capacitor is set to reduce the ripple due to charge into the capacitor each cycle. The steady state ripple due to charge is given by:

$$\%Ripple_Boost = \frac{I_{OUT(MAX)} \bullet \left(V_{OUT} - V_{IN(MIN)}\right) \bullet 100\%}{C_{OUT} \bullet V_{OUT}^{2} \bullet f}$$

$$\%Ripple_Buck = \frac{\left(V_{IN(MAX)} - V_{OUT}\right) \bullet 100\%}{8 \bullet V_{IN(MAX)} \bullet f^{2} \bullet L \bullet C_{OUT}}$$

where COUT = output filter capacitor, F

The output capacitance is usually many times larger in order to handle the transient response of the converter. For a rule of thumb, the ratio of operating frequency to unity gain bandwidth of the converter is the amount the output capacitance will have to increase from the above calculations in order to maintain desired transient response.

The other component of ripple is due to ESR (equivalent series resistance) of the output capacitor. Low ESR capacitors should be used to minimize output voltage ripple.

For surface mount applications, Taiyo Yuden, TDK, AVX ceramic capacitors, AVX TPS series tantalum capacitors or Sanyo POSCAP are recommended. For the white LED application, a 20μF capacitor value is recommended.

## Packaging Information

DFN3*3-10L Package Outline Dimension

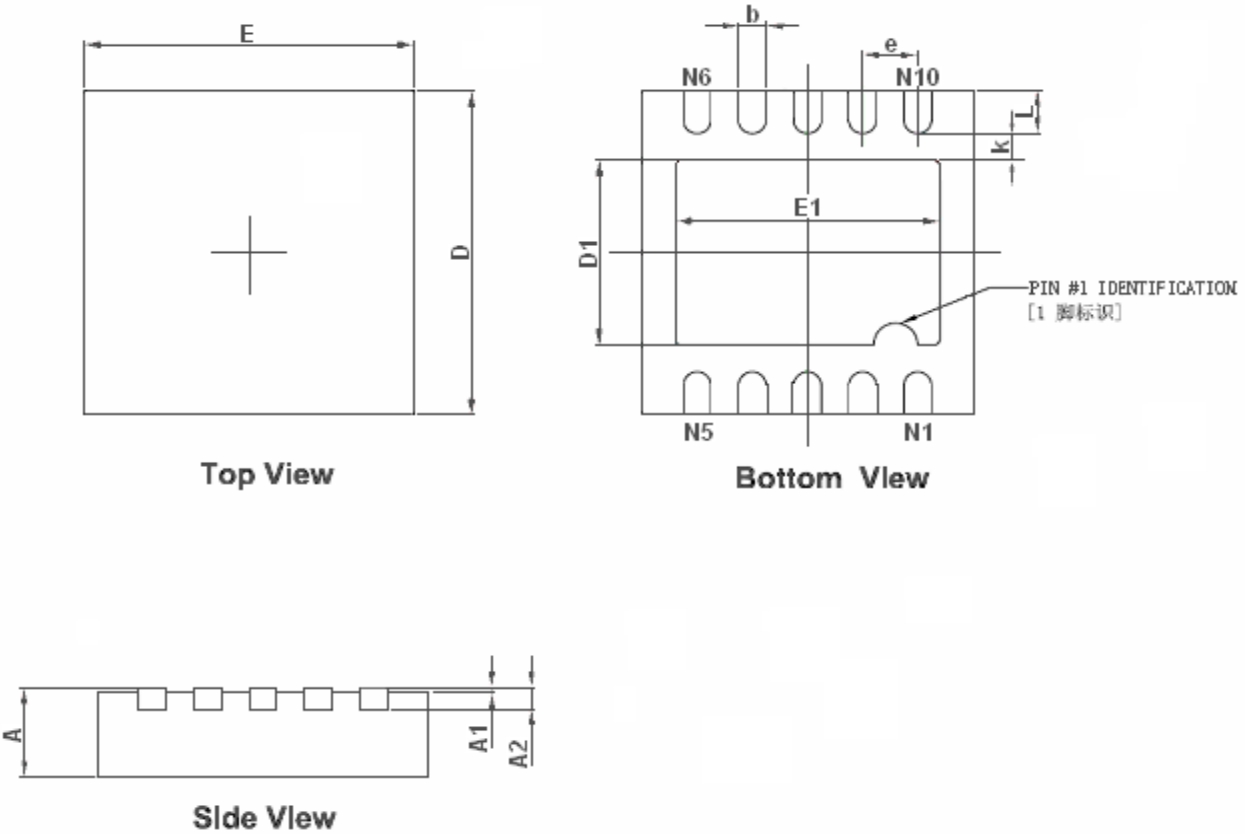


| Symbol | Dimensions In Millimeters | | Dimensions In Inches | |
|---|---|---|---|---|
| | Min | Max | Min | Max |
| A | 0.700/0.800 | 0.800/0.900 | 0.028/0.031 | 0.031/0.035 |
| A1 | 0.000 | 0.050 | 0.000 | 0.002 |
| A2 | 0.153 | 0.253 | 0.006 | 0.010 |
| D | 2.900 | 3.100 | 0.114 | 0.122 |
| E | 2.900 | 3.100 | 0.114 | 0.122 |
| D1 | 1.600 | 1.800 | 0.063 | 0.071 |
| E1 | 2.300 | 2.500 | 0.091 | 0.098 |
| k | 0.200MIN | | 0.008MIN | |
| b | 0.200 | 0.300 | 0.008 | 0.012 |
| e | 0.500TYP | | 0.020TYP | |
| L | 0.300 | 0.500 | 0.012 | 0.020 |

## Packaging Information

MSOP-10L Package Outline Dimension

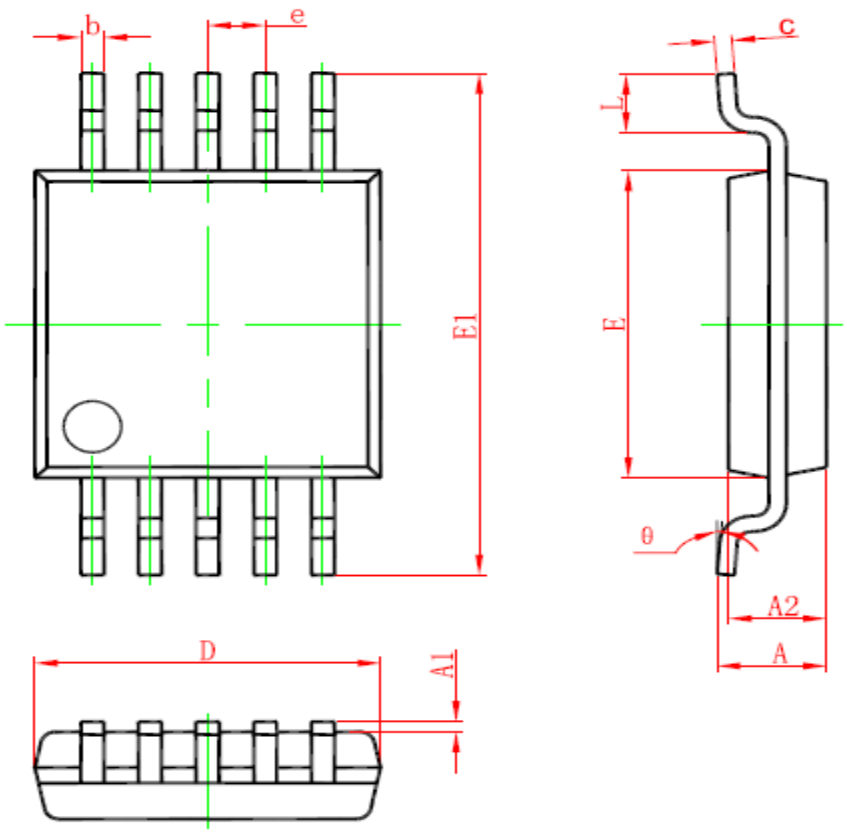


| Symbol | Dimensions In Millimeters | | Dimensions In Inches | |
|---|---|---|---|---|
| | Min | Max | Min | Max |
| A | 0.820 | 1.100 | 0.032 | 0.043 |
| A1 | 0.020 | 0.150 | 0.001 | 0.006 |
| A2 | 0.750 | 0.950 | 0.030 | 0.037 |
| b | 0.180 | 0.280 | 0.007 | 0.011 |
| C | 0.090 | 0.230 | 0.004 | 0.009 |
| D | 2.900 | 3.100 | 0.114 | 0.122 |
| e | 0.50(BSC) | | 0.020(BSC) | |
| E | 2.900 | 3.100 | 0.114 | 0.122 |
| E1 | 4.750 | 5.050 | 0.187 | 0.199 |
| L | 0.400 | 0.800 | 0.016 | 0.031 |
| | 0° | 6° | 0° | 6° |