HM4110

100V_{DS}／±25V_{GS}／170A(I_D) N-Channel Enha ncement Mode MOSFET

Features

- V_{DSS}=100V／V_{GSS}=±25V／I_D=170A
  $R_{DS(ON)}$=5.5mΩ(max.)@V_{GS}=10V
- Low Dense Cell Design
- Reliable and Rugged
- Advanced trench process technology

Applications

- Synchronous Rectification
- Power Management in Inverter System

Switching Time Test Circuit and Waveforms

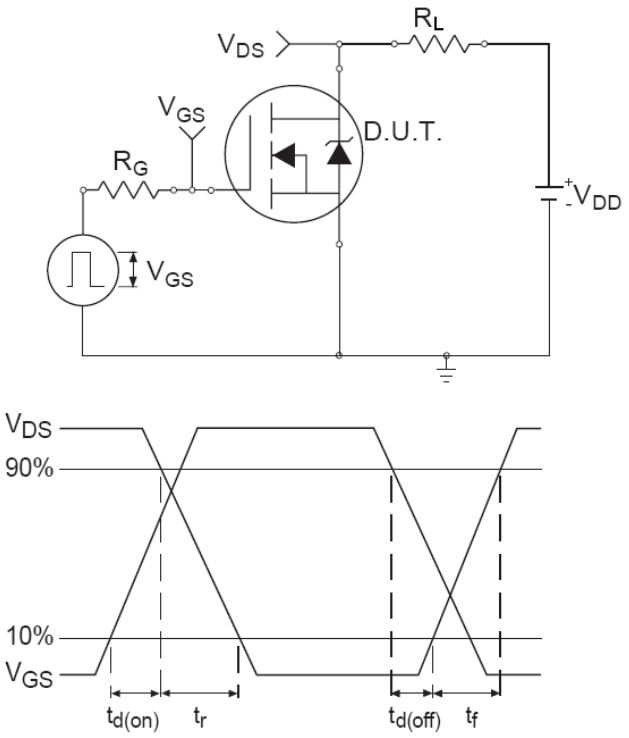

Pin Description

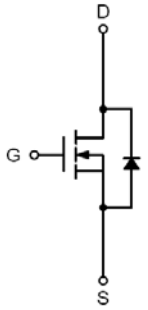

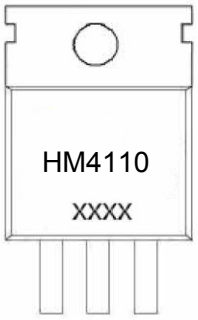

Marking and pin Assignment

TO-220-3L top view

Package Marking and Ordering Information

Device Marking	Device	Device Package	Reel Size	Tape width	Quantity
HM4110	HM4110	TO-220-3L	-	-	-

Electrical Characteristics of CP Test (TA=25°C unless otherwise noted)

Symbol	Parameter	Test Conditions	Min.	Typ	Max.	Unit
Static Characteristics						
BV_{DSS}	Drain-Source Breakdown Voltage	V_{GS}=0V,I_D=250uA	100			V
I_{DSS}	Zero Gate Voltage Drain Current	V_{DS}=80V,V_{GS}=0V			1	uA
		T_J=85°C			30	
$V_{GS(th)}$	Gate Threshold Voltage	V_{DS}=V_{GS},I_D=250uA	2	2.8	4	V
I_{GSS}	Gate Leakage Current	V_{GS}=±25V, V_{DS}=0V			±100	nA
$R_{DS(on)}$	Drain-Source On-Resistance	V_{GS}=10V, I_D=30A		4.5	5.5	mΩ
V_{SD}	Diode Forward Voltage	I_{SD}=30A,V_{GS}=0V			1.3	V
R_G	Gate Resistance	V_{GS}=0V, V_{DS}=0V, Frequency=1MHz		2		Ω

Note: 1: Pulse test ; pulse width ≦ 300ns, duty cycle ≦ 2%.
2: Guaranteed by design, not subject to production testing.

TO-220-3L PACKAGE OUTLINE DIMENSIONS

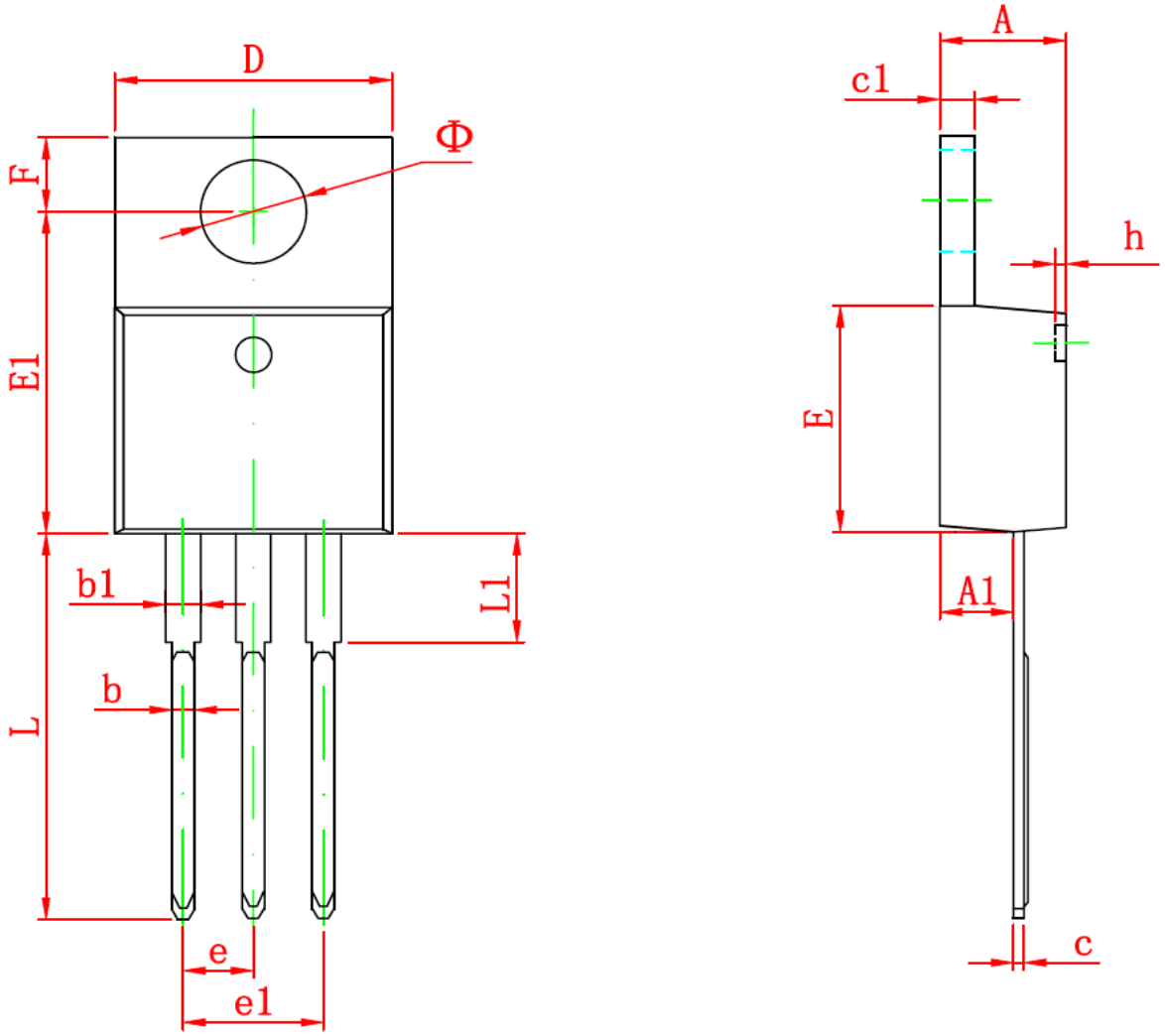

Symbol	Dimensions In Millimeters		Dimensions In Inches	
	Min	Max	Min	Max
A	4.470	4.670	0.176	0.184
A1	2.520	2.820	0.099	0.111
b	0.710	0.910	0.028	0.036
b1	1.170	1.370	0.046	0.054
c	0.310	0.530	0.012	0.021
c1	1.170	1.370	0.046	0.054
D	10.010	10.310	0.394	0.406
E	8.500	8.900	0.335	0.350
E1	12.060	12.460	0.475	0.491
e	2.540 TYP		0.100 TYP	
e1	4.980	5.180	0.196	0.204
F	2.590	2.890	0.102	0.114
h	0.000	0.300	0.000	0.012
L	13.400	13.800	0.528	0.543
L1	3.560	3.960	0.140	0.156
Φ	3.735	3.935	0.147	0.155

ATTENTION:

- Any and all H&M SEMI products described or contained herein do not have specifications that can handle applications that require extremely high levels of reliability, such as life-support systems, aircraft's control systems, or other applications whose failure can be reasonably expected to result in serious physical and/or material damage. Consult with your H&M SEMI representative nearest you before using any H&M SEMI products described or contained herein in such applications.
- H&M SEMI assumes no responsibility for equipment failures that result from using products at values that exceed, even momentarily, rated values (such as maximum ratings, operating condition ranges, or other parameters) listed in products specifications of any and all H&M SEMI products described or contained herein.
- Specifications of any and all H&M SEMI products described or contained herein stipulate the performance, characteristics, and functions of the described products in the independent state, and are not guarantees of the performance, characteristics, and functions of the described products as mounted in the customer's products or equipment. To verify symptoms and states that cannot be evaluated in an independent device, the customer should always evaluate and test devices mounted in the customer's products or equipment.
- H&M Semiconductor CO.,LTD. strives to supply high-quality high-reliability products. However, any and all semiconductor products fail with some probability. It is possible that these probabilistic failures could give rise to accidents or events that could endanger human lives, that could give rise to smoke or fire, or that could cause damage to other property. When designing equipment, adopt safety measures so that these kinds of accidents or events cannot occur. Such measures include but are not limited to protective circuits and error prevention circuits for safe design, redundant design, and structural design.
- In the event that any or all H&M SEMI products(including technical data, services) described or contained herein are controlled under any of applicable local export control laws and regulations, such products must not be exported without obtaining the export license from the authorities concerned in accordance with the above law.
- No part of this publication may be reproduced or transmitted in any form or by any means, electronic or mechanical, including photocopying and recording, or any information storage or retrieval system, or otherwise, without the prior written permission of H&M Semiconductor CO.,LTD.
- Information (including circuit diagrams and circuit parameters) herein is for example only ; it is not guaranteed for volume production. H&M SEMI believes information herein is accurate and reliable, but no guarantees are made or implied regarding its use or any infringements of intellectual property rights or other rights of third parties.
- Any and all information described or contained herein are subject to change without notice due to product/technology improvement, etc. When designing equipment, refer to the "Delivery Specification" for the H&M SEMI product that you intend to use.
- This catalog provides information as of Sep.2010. Specifications and information herein are subject to change without notice.