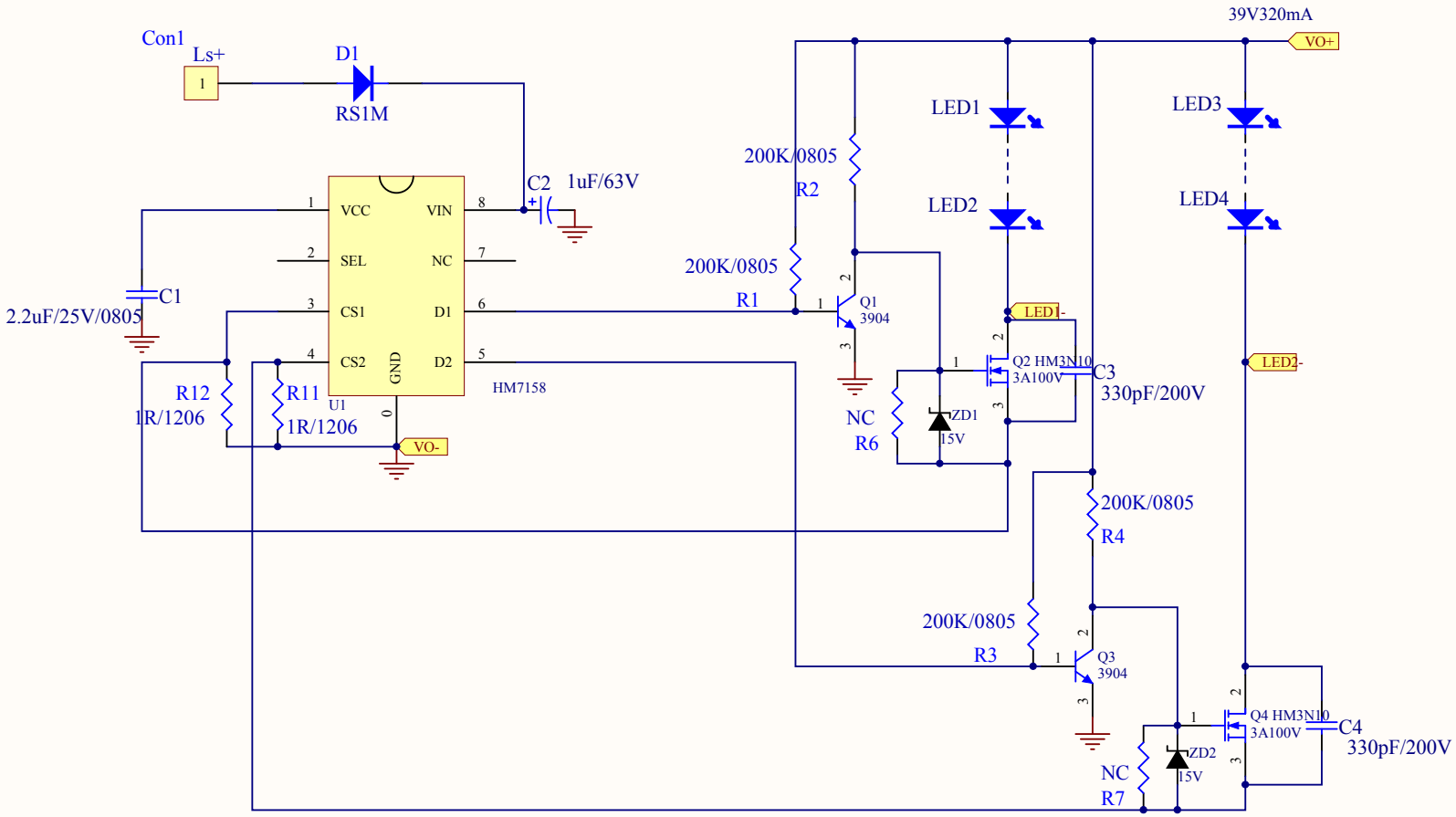

Ref parameter setting for Isolated solution is based on 39V320mA output :

Con 1 Connect to Ls+ before Free wheeling diode at secondary side

C2 Capable of with stand voltage need to be bigger than Vout, used in low Voltage input, when Toff is too short to charge the VCC cap, then IC can't go to the next stage, use C2 to inhance the VCC charge energy.

Title			
Size A4	Number		Revision
Date: 2017/5/24		Sheet of	
File: D:\BP Files\..\HM7158 DEMO ext MOS Jerry Wang 2017-05-24.sch		Drawn By:	