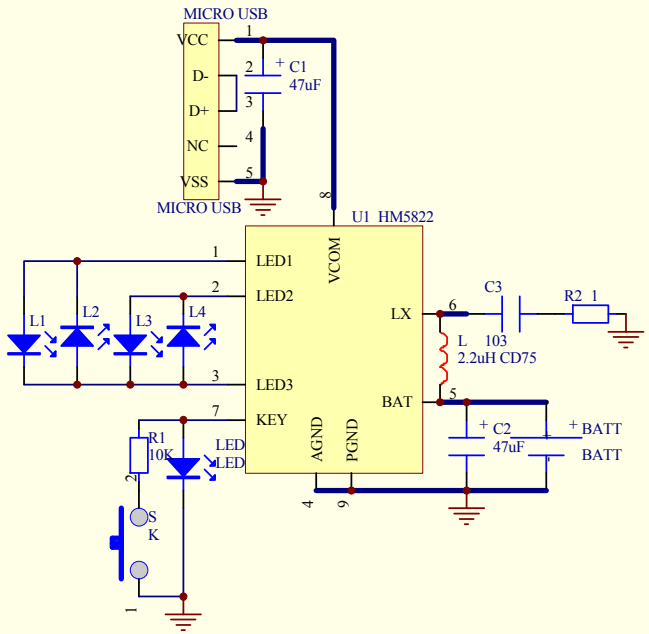

Title		
Size A4	Number	Revision
Date: 11-Sep-2018	Sheet of	
File: G:\张春峰\做DEMO\DEMO.ddb	Drawn By:	