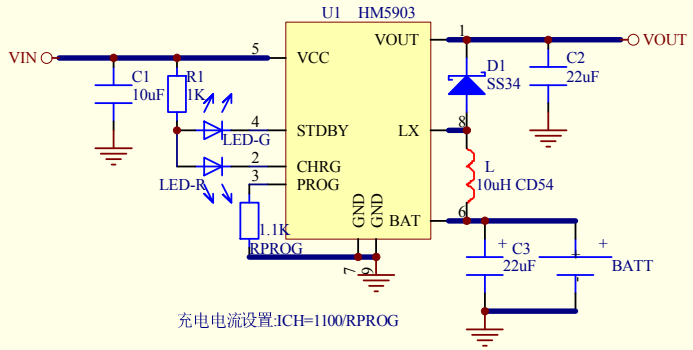

Title		
Size A4	Number	Revision
Date: 28-Jun-2020		Sheet of
File: E:\张春峰\做DEMO\DEMO.ddb		Drawn By: